NON-MAGNETIC TOUCH LATCH

NO SCREW

PR-21P

- Strong retaining force.
- Flush design counterplate.

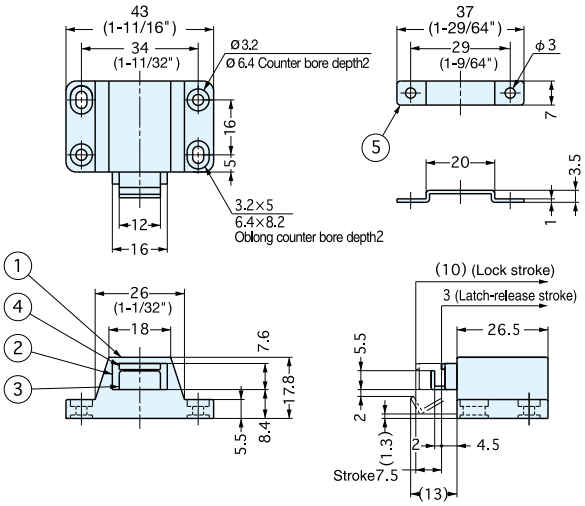

Item No.	Retaining Force (kg)	Weight (g)	Box (pcs)	Carton (pcs)
PR-21P/BLK	10 (22 lbs)	16.3	100	800

No.	Part Name	Material	Finish/Color
①	Housing	ABS	Black
②	Slide	Polyacetal	
③	Arm	Steel	Brown
④	Yoke		GB
⑤	Strike		Chromate

NON-MAGNETIC TOUCH LATCH

2.7×13
2.4×10
STEEL

MC-28

- Touch latch with floating strike for easy alignment.
- Note: For overlay door, allow 3mm (1/8") gap between door and cabinet frame for push motion. Pulling door with excessive force without unlatching the unit may damage the mechanism. Constant loading of over 3kgf or excessive pushing or pulling is not recommended.

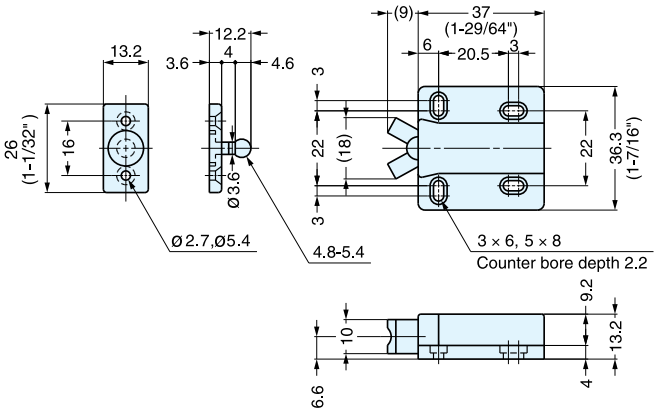

Item No.	Retaining Force (kg)	Weight (g)	Box (pcs)	Carton (pcs)
MC-28	3 (6.6 lbs)	15	50	500

Material	Color
ABS	Black